A Brief Intro to Electronics

By Seeed Studio

Background

Electronics is not hard after all! It's all about building a strong foundation and progress from there. We believe this book will give you a quick introduction to electronics and help you grasp fundamental knowledge so that you can continue to learn further and get very familiar with electronics.

Fundamental Concepts of Electricity

When you start learning about electronics, electricity is something that you cannot forget about. Fundamentals of electricity is very necessary to learn at first. We will quickly discuss about 3 basic concepts of electricity: Voltage, Current and Resistance.

Voltage

Voltage is the difference in electrical potential between two points in an electric circuit. Normally one point has more charge than the other and the charge difference between these two points can be considered as voltage. Voltage is measure in **Volts (V)**.

Current

Current is the rate at which electrons flow past a point in an enclosed electrical circuit over a given period of time. Current is measured is **Amperes (A)**. One ampere of current can be defined as one coulomb of electrical charge moving past a point in one second.

Resistance

Resistance is a measure of the hindrance to current flow in an electrical circuit. All materials resist current flow to some extent. When the resistance is high, the current flow is low and vice versa. Resistance is measured in **Ohms (Ω)**.

Ohm's Law

Now that you understood about the fundamental concepts of electricity, let us look at how they relate with each other. Ohm's Law is a formula which is used to illustrate the relationship between voltage, current and resistance in an electrical circuit. It states that the current flowing through a conductor between two points is directly proportional to the voltage across the two points.

The formula for Ohm's Law is as follows:

$$V = I * R$$

where:

V is voltage measured in volts

I is current measure in amperes

R is resistance measured in ohms

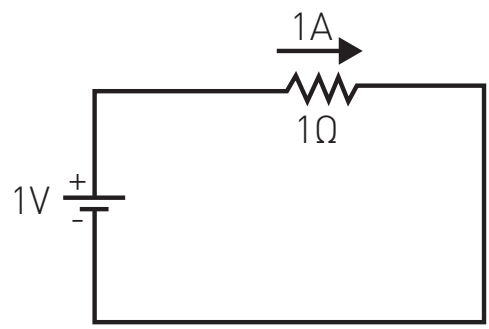

According to this formula, you need one-volt to push one amp of current through one ohm of resistance.

Breadboarding

Before moving further, let's explain how to use a breadboard when prototyping with electronics. A breadboard has electrically connected strips that allow you to connect to electrical components and build awesome circuits!

The black and red lines show how the points are connected internally.

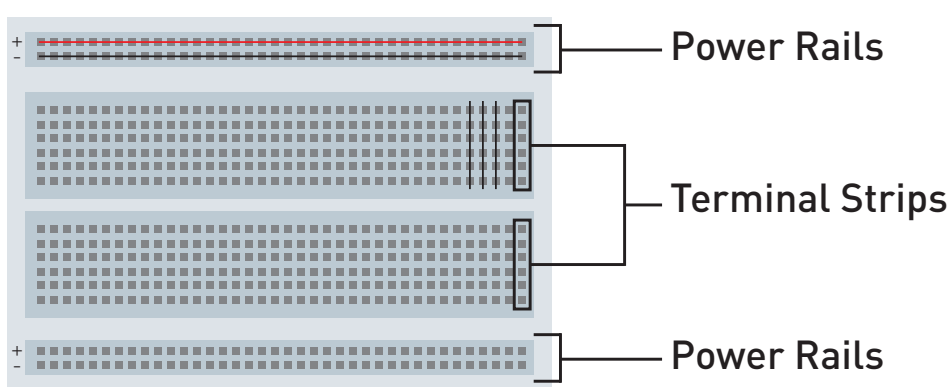

Fundamental Electronic Components

If you look at any electronic circuit, there are fundamental electronic components that contribute to the operation of the circuit such as resistors, diodes, capacitors, transistors, swtiches and ICs. They may sound like a lot, but we will try to educate you briefly and clearly about each of these components.

Resistor

As we have talked before, resistance is a measure of the hindrance to current flow in an electrical circuit. So, a resistor is a component which can help to achieve the resistance in a circuit.

Types of resistors

There are different types of resistors based on construction type. Mainly there are two types.

- Fixed Resistors
- Variable Resistors

Fixed Resistors: These have a fixed resistance value which is not adjustable.

Circuit Symbol: 

Variable Resistors: These have resistance values which can be adjusted. The most common variable resistor is the potentiometer. Its resistance can be changed by rotating the knob in either direction.

Circuit Symbol: 

Diode

A diode is an electronic component with two terminals that allows current to flow in only one direction but restrict the current flow in the opposite direction.

Circuit Symbol: 

A diode is said to be **forward biased** when it is letting the current flow through it and can be placed in a circuit so that the arrowhead is pointing to the direction of the current flow as follows.

A diode is said to be **reverse biased** when it is not letting the current flow through it and can be placed in a circuit so that the arrowhead is pointing to the opposite direction of the current flow as follows.

Capacitor 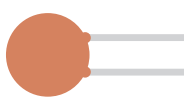

Capacitor is an electronic component that has the ability to store electric charge. It is formed by having an insulating plate between two conducting plates as follows.

When you connect a capacitor to power, you add electrical energy to it and both the plates accumulate positive and negative charges respectively. This process is called **charging**. On the other hand, releasing the electrical energy stored in a capacitor is knows as **discharging**.

The main difference between a battery and a capacitor is that a battery releases the stored energy very slowly whereas a capacitor releases energy within seconds.

Circuit Symbol: 

Transistor

Transistor is an electronic component that has the ability to start and stop the flow of current and control the amount of current in an electronic circuit. It can switch electronic signals as well as amplify them which in turn let you control the current flowing through a circuit precisely.

There are two types of transistors which are **BJT (Bipolar Junction Transistor)** and **FET (Field Effect Transistor)**.

BJTs are divided into two types which are **NPN** and **PNP** transistor. They have the following symbols when used in a circuit.

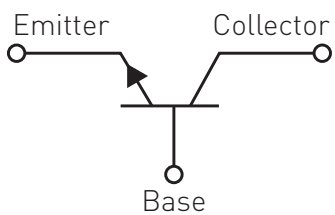

NPN Transistor

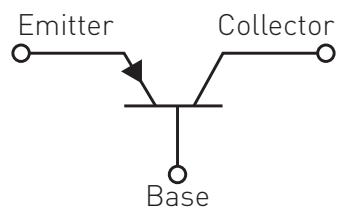

PNP Transistor

Mainly it has 3 terminals, namely Base, Emitter and Collector and the arrow indicates the direction of the flow of current.

Switch

A switch is an electronic component which is able to turn on and off a circuit. You can control the current flow to a circuit by using a switch without needing to cut wires to disconnect the power to the circuit.

Circuit Symbol: 

Switches have two states which are **open (OFF)** and **close (ON)**.

A switch is said to be open state or ON when there is a gap in the circuit and therefore no current flow.

A switch is said to be in close state or OFF when the circuit is complete and therefore has a current flow.

IC (Integrated Circuit)

An IC (Integrated Circuit) is a major electronic component in an electronic circuit. This normally acts as the brain of most circuits. It consists of many electronics components such as transistors, resistors and capacitors packed altogether into one small chip. There are different types of ICs such as FPGAs, 555 timers, microcontrollers and so on, to serve different purposes.

You might be familiar with the famous microcontroller board which is the **Arduino UNO**. Arduino UNO comes with an 8-bit ATmega328 microcontroller chip which is the main controller of the board. Also we offer an alternative board which is the Seeeduino Lotus V1.1 based on ATmega328 with multiple Grove ports and we have a wide variety of other boards in the Seeeduino family.

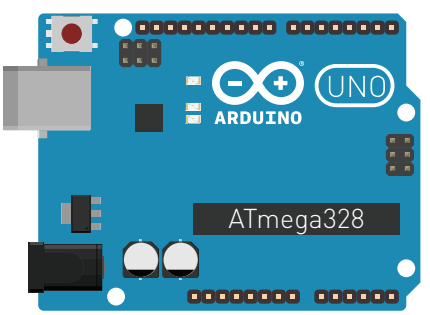

Arduino UNO

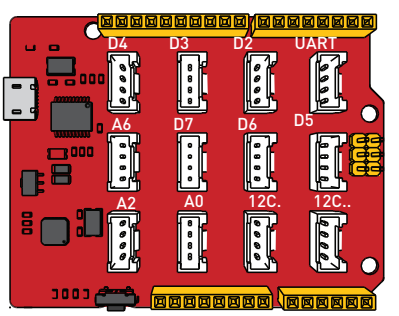

Seeeduino Lotus V1.1

Various sensors such as accelerometers, temperature and humidity sensors come with small ICs. We have developed more than 300 **Grove modules** and they are all packed with these small ICs and they allow these sensors to function properly. Learn more about Grove at ***seeedstudio.com/category/Grove-c-1003.html***

Analog and Digital Signals

When we build projects using an Arduino or a Raspberry Pi, we normally would connect different sensors to obtain information regarding the physical world and do some processing based on that information. So, when talking about communication, there are two types of signals that we often come across:

- Analog Signals
- Digital Signals

Let's first understand what these signals are:

Analog Signals

Analog signals are a type of continuous signals which are time-varying. Most of the environmental sensors such as temperature, light and pressure sensors communicate with microcontrollers using analog signals.

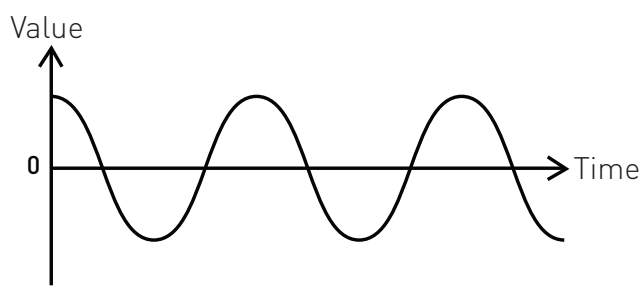

Digital Signals

Digital signals are a type of discrete signals which are time-varying. The data is carried in the form of binary in a digital signal. This means it can either carry a "0" or a "1".

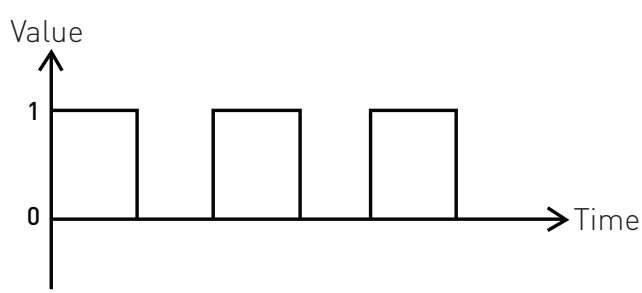

Communication Protocols

When communicating with a microcontroller board such as an Arduino UNO, the Digital and Analog pins will be enough for some projects, but you will need to use the onboard peripherals for many other advanced projects. The most common communication protocols on an Arduino are UART, I2C and SPI which are serial communication protocols.

Serial communication is a communication method used in telecommunications where data is transmitted one bit at a time in sequential order over a communication channel.

Parallel communication is a communication method used in telecommunications where multiple bits of data is transmitted at the same time over a communication channel.

UART

UART stands for Universal Asynchronous Receiver/Transmitter. It supports bidirectional, serial data transmission and is asynchronous. **Asynchronous** means the communication is not dependent on a synchronized clock signal between the two devices communicating together. UART operates at full duplex where data can be sent and received simultaneously. It uses 2 data lines which are TX (for transmitting), RX (for receiving) and one ground line to communicate between each other. The hardware connection diagram is as follows.

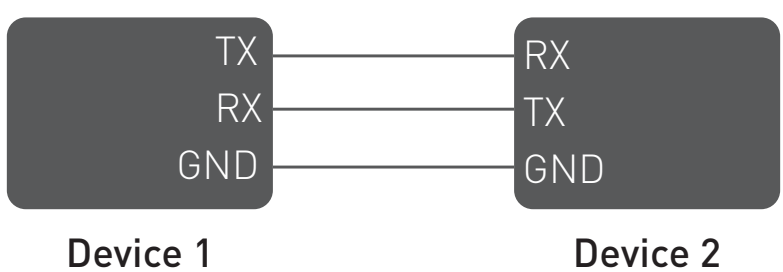

I2C

I2C stands for Inter-integrated-circuit. It is a simple, bidirectional serial bus and only 2 wires (SDA and SCL) are used to transmit information between devices connected to the bus. I2C allows you to connect up to 128 devices to your main board! I2C operates at half duplex where data can be either sent or received at one time. This is **Synchronous** meaning the communication is dependent on a synchronized clock signal between the two devices communicating together. The hardware connection diagram is as follows.

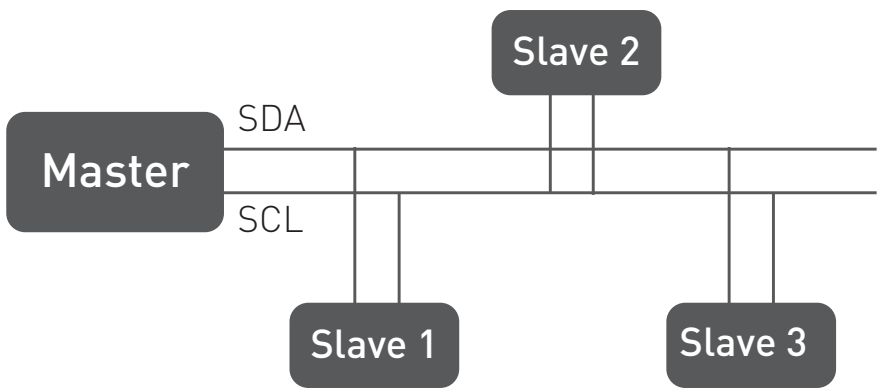

SPI

SPI stands for Serial Peripheral Interface. It supports bidirectional, serial data transmission and is synchronous. SPI operates at full duplex where data can be sent and received simultaneously. Compared to UART and I2C, it is the fastest communication protocol with a 8Mbits or more data transmission rates. It is typically faster due to its simple protocol. Data/clock lines are shared between devices and each device will require a unique address wire. The hardware connection diagram is as follows.

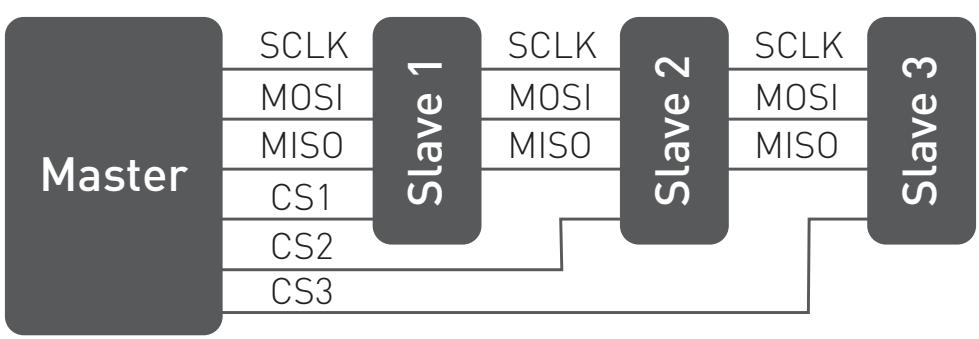

UART vs I2C vs SPI

	UART	I2C	SPI
Complexity	Simple	Easy to chain many devices	Complex as devices increase
Speed	Slowest	Faster than UART	Fastest
No. of devices	Up to 2	Up to 128	Many
Minimum number of wies	2	2	4
Duplex	Full Duplex	Half Duplex	Full Duplex
Distance	Longest	Shorter than UART	Shorter than I2C

Resources

Seeed bazaar: ***www.seeedstudio.com***

Seeed wiki main page: ***wiki.seeedstudio.com***

For technical inquiries: ***forum.seeedstudio.com***

For latest hardware news: ***www.seeedstudio.com/blog***

Scan here to:

Stay tuned with our newsletter for all the latest product releases

seeed studio

The IoT Hardware Enabler

www.seeedstudio.com

@seeedstudio